12EC33

USN | | | | | | | | | | |

R. V. COLLEGE OF ENGINEERING

Autonomous Institution affiliated to VTU

III Semester B. E. Examinations Nov/Dec-15

Electronics and Communication Engineering

ANALOG MICROELECTRONIC CIRCUITS

Time: 03 Hours ***Maximum Marks: 100***

Instructions to candidates:

1. Answer all questions from Part A. Part A questions should be answered in first three pages of the answer book only.
2. Answer FIVE full questions from Part B.

PART-A

1	1.1	The region of operation of a P-channel $MOSFET$, with $V_t = -1V$, is _____, when it is biased such that $V_G = -5V$, $V_S = -1V$ and $V_D = -6V$.	01
	1.2	An $NMOS$ transistor acts as an $500\,\Omega$ resistor for small values of V_{DS}, when $V_{OV} = 2V$. If the device has to act as a $400\,\Omega$ resistor, V_{OV}_____.	01
	1.3	In the circuit of fig 1c, the minimum value of V_{DD} so that Q_1 does not enter triode region is equal to _____. 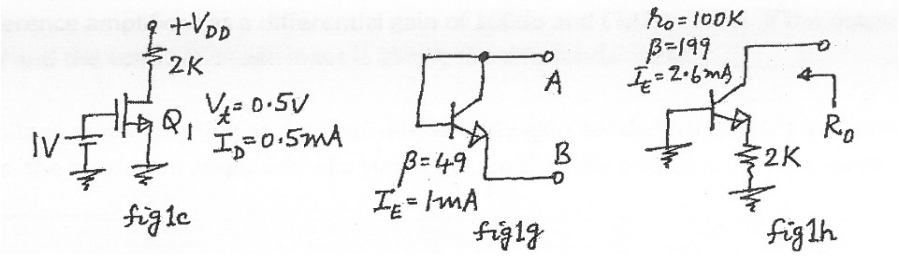	01
	1.4	An $NMOS$ transistor, whose $C_{OX} = 10\,\frac{fF}{\mu^2}, W = 50\mu, L = 0.4\mu$ and $V_t = 1V$, is biased with V_{GS} equal to $2V$. The total charge stored in the channel for $V_{DS} = 0$ is _____.	01
	1.5	The intrinsic gain of a BJT, whose early voltage $= 26V$, at $27°C =$ _____.	01
	1.6	A BJT operated in _____ configuration acts closer to a voltage amplifier.	01
	1.7	Assuming the transistor to be operating in the active region, the incremental resistance between the terminals A and B in the circuit of fig 1g = _____.	01
	1.8	Assuming the transistor to be operating in the active region, the output impedance, R_o in the circuit of fig 1h = _____.	01
	1.9	In the mirror circuit of fig 1i, the transistors are identical with $\beta = 40$. $I_O =$_____.	01
	1.10	In the differential amplifier circuit of fig 1j, the transistors are identical with $V_t = 0.7\,V$ and $k_n'\ W/L = 3.5\,mA/V^2$.If $V_{CS}(min) = 0.5V, V_{ICM}(min)$ and $V_{ICM}(max)$ for the differential amplifier are respectively _____ and _____.	02

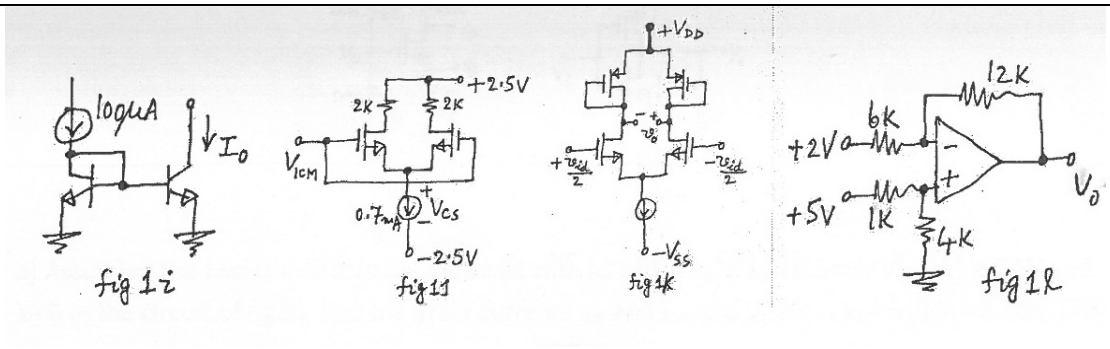

1.11	In the circuit of fig1k, v_o/v_{id} = _____. Assume $g_{mn} = 2\,mA/V$, $g_{mp} = 1\ mA/V$ and $\lambda = 0$, for all transistors.	01
1.12	The output voltage in the circuit of fig11 = _____.	01
1.13	A difference amplifier has a differential gain of $100\,dB$ and $CMRR = 88\,dB$. If the output voltage is $200\,mV$ and the common mode input is $25\,mV$, the differential input = _____.	01
1.14	In a voltage amplifier using an op amp, whose unity gain bandwidth is $5\,MHz$ and slew rate is $10\ V/\mu sec$, the maximum amplitude of a step input, so that the output is purely exponential, is equal to _____.	01
1.15	An op amp with a unity gain bandwidth of $10\,MHz$ is used as an amplifier with a gain of 20. The $3\,dB$ frequency of the closed loop amplifier = _____.	01
1.16	An amplifier delivers a power output of $10\,W$ with 15% total harmonic distortion, when the input voltage is $15\,mV$. If $40\,dB$ negative feedback is provided and the output power is to remain at $10W$, the required input signal = _____ and the total harmonic distortion of the closed loop amplifier = _____.	02
1.17	A power transistor has its $\theta_{JA} = 2^0\,C/W$.If the dissipation in the transistor is $40\,W$ at an ambiemnt temp of 40°C, the junction temperature of the transistor =_____.	01
1.18	A transformer coupled class-A power amplifier, operating from a $12\,V$ battery, is delivering power to a loud speaker of $4\,\Omega$ .If the transformer turns ratio is 2: 1, the maximum power output is equal to = _____..	01

PART-B

2	a	In the circuit of fig 2a, given $V_t = 0.5\,V$ and $k_n'\ W/L = 0.5\,m\,A/V^2$, determine $V_G, V_D, V_S, I_1, I_2, I_D$ and I_S. Assume $\lambda = 0$. 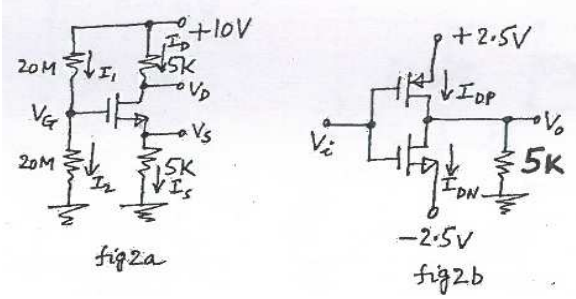	08
	b	Assuming the two transistors are matched with $k_n'\ W/L = k_p'\ W/L = 0.5\,m\,A/V^2$, $\lvert V_t \rvert = 0.5\,V$ and $\lambda = 0$ in the circuit of fig2b, find the drain currents I_{DP} and I_{DN} and V_O for: i) $V_i = 0$ ii) $V_i = +2.5\,V$	08

		OR	
3	a	Calculate the values of V_1, V_2, V_3 in the circuit of fig3a. The $MOSFETs$ are identical with $V_t = 1V$ and $k_n' \; W/L = 0.25\, m\, A/V^2$. 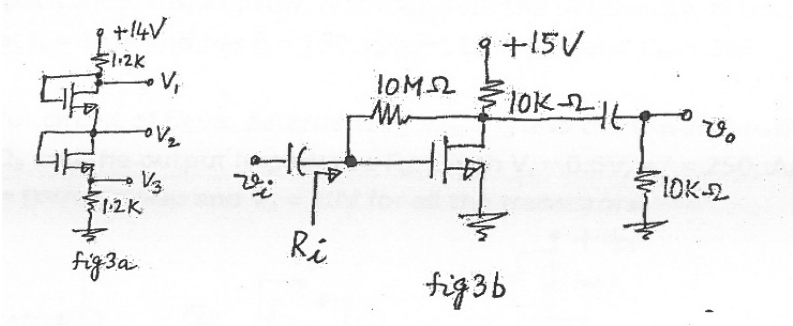	08
	b	In the CS amplifier circuit of fig3b, determine: i) v_o/v_i ii) Input impedance, R_i iii) The maximum possible peak amplitude of the input signal, so that the output is not distorted. The $MOSFET$ has $V_t = 1.5\, V, V_A = 50\, V$ and $k_n' = 0.25\, m\, A/V^2$.	08
4	a.	In the circuit of fig 4a, i) Determine the operating point and also the stabilization factor, $S(I_{CO})$. ii) Determine the voltage gain, v_o/v_s , and the input and output impedances of the amplifier. 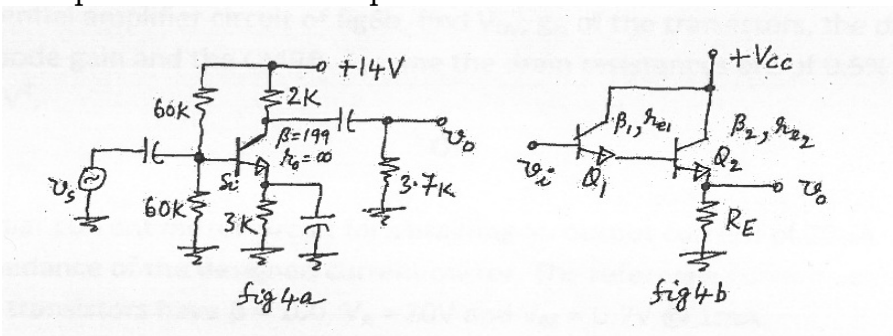	08
	b	Draw the small signal equivalent of the circuit shown in fig4b and obtain the expressions for the voltage gain, v_o/v_i, the input and output impedances.	08
		OR	
5	a	Determine I_E in the circuit of fig5a and draw its small signal equivalent and determine $\frac{v_o}{v_s}$,R_{in} *and* R_0. 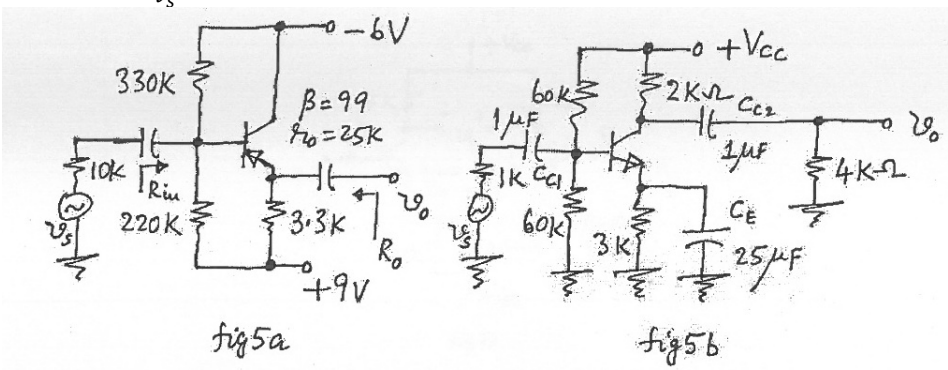	08

	b	In the RC coupled amplifier circuit of fig5b, determine the lower cut-off frequencies f_{LC1}, f_{LC2} and f_{LCE} due to C_{C1}, C_{C2} and C_E respectively and the upper cut-off frequencies f_{hi} and f_{ho}, due to input and output capacitances respectively. Also, calculate the bandwidth of the amplifier. The transistor is biased at $I_E = 1\,mA$ and has $\beta = 199$, $r_0 = \infty, C_{be} = 8pF$ *and* $C_{bc} = 2pF$.	08
6	a	In the Wilson mirror circuit of fig6a, determine I_o, V_{G2} ,V_{G3} and the lowest possible V_o . Also find g_m and r_0 of Q_2 and Q_3 and the output impedance R_o . Given $V_t = 0.6\,V$, $k_n' = 250\,\mu A/V^2$, $3(W/L)_1 = 1.5(W/L)_2 = (W/L)_3 = 60\mu$ and $V_A = 20\,V$ for all the transistors. 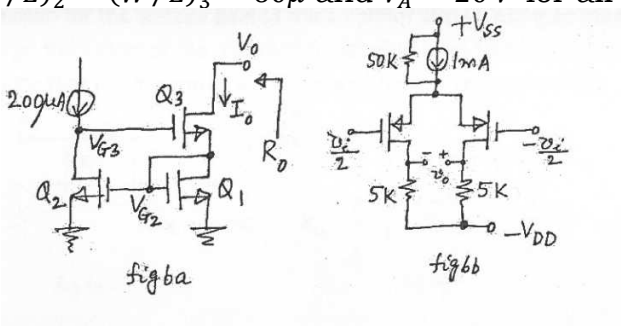	08
	b	In the differential amplifier circuit of fig6b, find V_{OV}, g_m of the transistors, the differential gain, the common mode gain and the $CMRR$. Assume the drain resistances are of 0.5% tolerance, $\lambda = 0$ and $k_p' = 1m\,A/V^2$.	08
		OR	
7	a	Design a Widlar current mirror circuit for obtaining an output current of $20\mu A$ assuming $V_{BE} = 0.7\,V$ @ $1\,mA$ and the transistors have very high β. The reference current is $0.5\,mA$. If the transistors have $\beta = 100$, $V_A = 20\,V$, determine the output impedance of the circuit.	08
	b	A differential amplifier circuit is shown in fig 7b. Determine the differential input impedance,R_{id}, differential gain, A_d, common mode input impedance ,R_{icm} , worst case common mode gain, A_{cm}, and $CMRR$, if the drain resistors are of 0.5% tolerance. 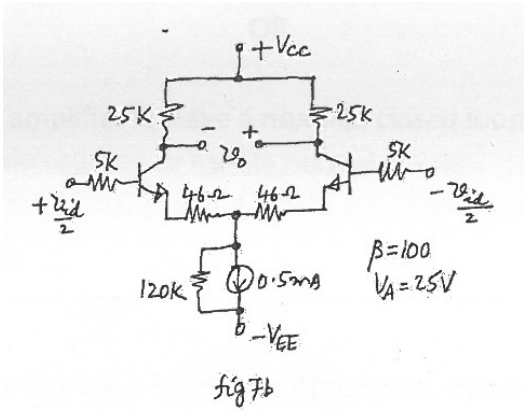	08
8	a	Design a difference amplifier using an ideal op amp to have a differential input impedance of $10\,K\Omega$, differential gain of $28\,dB$ and common mode gain equal to zero. In the designed circuit, if the resistors used are of 0.25 % tolerance, calculate the worst case differential gain, common mode gain and $CMRR$, Also calculate the common mode input resistance,R_{icm}.	10

	b	Draw the circuit of a full wave precision rectifier using two ideal op amps and explain its operation. The circuit should ensure that none of the op amps go into saturation at any time.	06
		OR	
9	a	Obtain an expression for the voltage gain of the amplifier circuit, using an ideal op amp, shown in fig 9a. Design the values of the different resistors to have an input impedance of $0.5\,M\Omega$ and a gain of -50. Note the maximum value allowed for any resistor is $1\,M\Omega$. 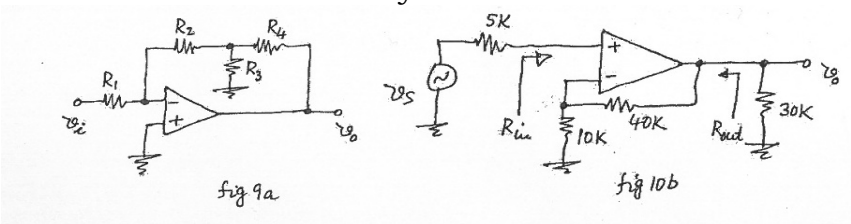	08
	b	Design an instrumentation amplifier using three ideal op amps to have a differential gain variable from 0.5 to 30 using a $47\,K\Omega$ potentiometer and with zero common mode gain.	08
10	a	A current amplifier has a gain A, input impedance R_i and output impedance R_0. Derive the expressions for the input and output impedances, R_{if} and R_{0f}, when current shunt negative feedback is provided to the amplifier with a feedback factor β .	06
	b	The op amp used in the circuit of fig10b has an open loop gain of 1000, input impedance of $100\,K\Omega$ and output impedance of $10\ K\Omega$. Determine $\frac{v_o}{v_s}$,R_{in} and R_{out} of the closed loop amplifier using feedback theory.	06
	c	Prove that the conversion efficiency of a class-B power output stage is 50%, when power dissipation in the transistors is maximum.	04
		OR	
11	a	It is required to design an amplifier to have a nominal closed loop gain of 20 using a battery operated amplifier whose gain reduces to half its normal full battery value over the life of the battery. If only 1% drop in closed loop gain is desired, determine the nominal open loop amplifier gain required and the feedback factor.	04
	b	In a complementary symmetry class-B power output stage, operating with a single supply of $20V$: i) What is the maximum power output possible into a 8Ω loud speaker? ii) If the input is $8\,Sin\,\omega t$, what is the power output delivered to the loud speaker? iii) What is the power dissipation in each of the two transistors, for the input as in (ii)? iv) What should be the minimum power dissipation capability of each transistor used in such an output stage?	08
	c	A power transistor for which $T_j(max) = 180^0C$ can dissipate $50W$ at a case temp 50°C. If it is connected to a heat sink ($\theta_{CS} = 0.6^0\,C/W$), what heat sink temp is required to ensure safe operation at $30\,W$ dissipation. For an ambient temp of 39°C, what should be the thermal resistance of the heat sink?	04

12EC34

USN | | | | | | | | | | |

R. V. COLLEGE OF ENGINEERING

Autonomous Institution affiliated to VTU

III Semester B. E. Examinations Nov/Dec-15

Electronics and Communication Engineering

ANALYSIS AND DESIGN OF DIGITAL CIRCUITS

Time: 03 Hours ***Maximum Marks: 100***

Instructions to candidates:

3. Answer all questions from Part A. Part A questions should be answered in first three pages of the answer book only.
4. Answer FIVE full questions from Part B.

PART-A

1	1.1	$(CAFE.94)_{16} = (_____)_8$	01
	1.2	Write the decimal number 945 in the following codes: i) 8421 code = _____ ii) 5211 code = _____.	01
	1.3	Given that $16_{10} = 100_b$., the value of b = _____.	01
	1.4	For the circuit shown in fig 1.4, the output F is given by _____. 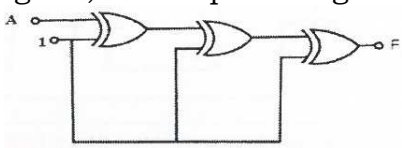 Fig 1.4	01
	1.5	The logic function implemented by the circuit shown in fig.1.5 is _____. 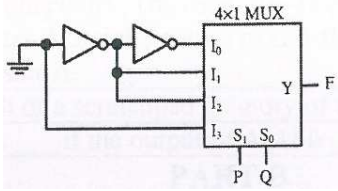 Fig 1.5	01
	1.6	In fig 1.6, $A = 1$ and $B = 1$. The input B is now replaced with a sequence 101010…., the outputs X and Y will be _____ and _____. 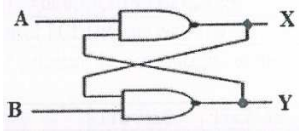 Fig 1.6	02
	1.7	The present output Q_n of an edge triggered JK flip-flop is logic '0'. If $j = 1$, then Q_{n+1} is _____.	01
	1.8	The output frequency of a decade counter that is clocked from a $50\,KHz$ signal is _____.	01
	1.9	Draw the state diagram for the logic circuit shown in fig 1.9. 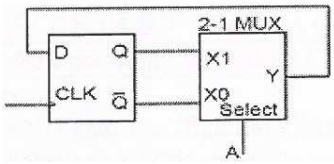 Fig 1.9	02

1.10 Reduce the number of states in the following state table, and tabulate the reduced state table:

Present state	Next state		Output	
	$X=0$	$X=1$	$X=0$	$X=1$
a	f	b	0	0
b	d	c	0	0
c	f	e	0	0
d	g	a	1	0
e	d	c	0	0
f	f	b	1	1
g	g	h	0	1
h	g	a	1	0

02

1.11 Assuming that all flip-flops are in reset condition initially, the count sequence observed at Q_A for the 4 clock cycle in the circuit shown in fig 1.11 is _____.

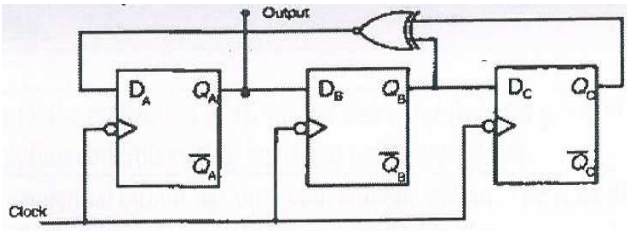

Fig 1.11 02

1.12 An 8-bit ring counter will go through a sequence of _____ states. 01

1.13 A serial adder uses two 4-bit shift registers. Register A holds a binary number 1001 and a register B holds 0101. The carry flip-flop Q is initially reset. List the binary values in register A and the output of flip-flop Q after each shift. Assume sum is shifted in register A. 02

1.14 The address bus width of a scratchpad memory of size 2048×16 is _____. 01

1.15 In status` register, Z is _____, if the output of ALU is _____. 01

PART-B

2 a Simplify the Boolean expression, F and show its implementation using $NAND$ gates. $F(A,B,C,DE) = \sum m(0,1,4,5,16,17,21,25,29)$ 05

b Describe the operation of $ECL\ OR$ gate with a suitable diagram. 06

c Define noise margin. Calculate the noise margins of the $TTL74LS$ and $TTL74AS\ IC$s described below.

	$TTL\ 74LS$	$TTL\ 74\ AS$
$V_{OH\,min}$	$2.7\,V$	$2.5\,V$
$V_{IH\,min}$	$2\,V$	$2\,V$
$V_{OL\,max}$	$0.5\,V$	$0.5\,V$
$V_{IL\,max}$	$0.8\,V$	$0.8\,V$

05

OR

3 a Simplify the Boolean expression, F and show its implementations using $NAND$ gates : $F(A,B,C,D,E) = \bar{A}\bar{B}C\bar{E} + \bar{B}\bar{C}\bar{D}\bar{E} + \bar{A}\bar{B}\bar{D} + \bar{B}C\bar{D} + \bar{A}CD + \bar{A}BD$ 06

b With a diagram, explain the operation of a 3 input CMOS NAND gate. 05

	c	Define fan-out and fan-in. Refer to the $74ALS20\ NAND$ gate specification given below and determine how many $74ALS20\ NAND$ gates can be driven by the output of another $74\ ALS20\ NAND$ gates. $I_{OH\ (max)}$: $0.4\ mA$; $I_{IH\ (max)}$: $20\mu A$; $I_{OL\ (max)}$: $8\ mA$; $I_{IL\ (max)}$: $0.1\ mA$	05
4	a	Design a 4-bit carry–look-ahead adder.	06
	b	Implement the following Boolean function using an 8: 1 multiplexer. $F(A,B,C,D) = A\bar{B} + BD + \bar{B}C\,\bar{D}$	05
	c	Design a logic circuit for 2×2 binary multiplier using AND gates and binary adders.	05
		OR	
5	a	Design a 4-bit BCD adder that adds two BCD digits and produces a sum digit in BCD.	06
	b	Construct 4- to-16 line decoder with five 2- to- 4 line decoder having enable inputs.	05
	c	Write the truth table of an octal-to-binary priority encoder with LSB input (I_0) having the highest priority. Draw its block diagram having an output V to indicate that at least one of the inputs is present. What will be the value of the four outputs, if inputs I_1, I_3 and I_7 are at 1 at the same time?	05
6	a	A PN flip-flop has four operations: clear to 0, no change, complement and set to 1, when inputs P and N are $00, 01, 10$ and 11 respectively. i) Tabulate the characteristic table ii) Derive the characteristic equation iii) Tabulate the excitation table iv) Show how the PN flip-flop can be converted to a D flip-flop.	05
	b	A sequential circuit has one input and one output. The state diagram is shown in fig 6 b. Design a sequential circuit using D flip-flop. 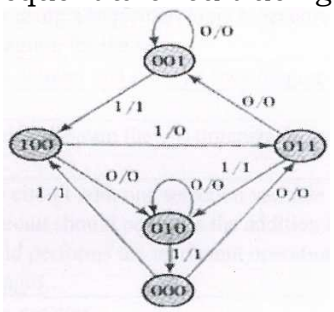 Fig 6b	06
	c	A sequential circuit with 4 flip-flops $(A, B, C\ D)$ is characterized by state equation as given below: $A_{n+1} = A'BC' + A'B'C + ACD' + AC'D$ $B_{n+1} = AD' + A'BD$ $C_{n+1} = A$ $D_{n+1} = D'$ (' indicates complement of a variable) Where $A_{n+1}, B_{n+1}, C_{n+1}$ and D_{n+1} and A, B, C and D are next states and present states of FFs. Design a sequential circuit using JK Flip-Flops.	05
		OR	
7	a	Show the realization of a JK master slave flip-flop using $NAND$ gates. Explain toggling condition using input and output waveforms.	05

	b	A clocked sequential circuit has three states, A, B and C and one input X. As long as the input X is '0', the circuit alternates between the states A and B. If the input X becomes '1' (either in state A or in state B), the circuit goes to state C and remains in state C as long as X continues to be 1. The circuit returns to state A, if the input becomes '0' once again and from then on repeats its behavior. Assume that the state assignments are $A = 00, B = 01$ and $C = 10$. i) Draw the state diagram of the circuit. ii) Give the state table of the circuit. iii) Draw the circuit using JK flip flops.	06
	c	Design a synchronous counter with the following Sequence: $0, 1, 3, 7, 6, 4$ and repeat. Use T flip-flops.	05
8	a	Design mod-32 ripple counter. If the propagation delay of each flip-flop is 20 nsec, determine the maximum clock frequency to be used.	05
	b	Design a 4-bit shift register with a parallel load using D flip-flops. There are two control inputs: shift and load. When shift $= 1$, the contents of the register are shifted by one position right. New data is transferred into the register when load $= 1$ and shift $= 0$. If both the control inputs are equal to 0, the contents of the register do not change. Write the functional table showing the different operations.	06
	c	Design a sequence generator for the sequence (0111) using JK flip-flops.	05
		OR	
9	a	Design a 4-bit BCD synchronous counter using JK flip flops and draw its timing diagrams.	06
	b	Design a serial adder using a sequential logic procedure ($JK\ FFs$). Draw the state table and the state diagram for the same.	06
	c	Design a 6-bit Johnson counter and draw its state diagram.	04
10	a	Describe with a suitable diagram the bus organization of a processor register with ALU.	06
	b	Design an arithmetic circuit with one selection variable S and two data inputs A and B. When $S = 1$, circuit should perform the addition operation $F = A + B$. When $S = 0$, the circuit should perform the increment operation $F = A + 1$. Draw the logic diagram of a typical stage.	06
	c	Write a descriptive note on status register.	04
		OR	
11	a	Design an arithmetic circuit with two selection variables s_1 and s_0, which generates the arithmetic operation shown in table 1. Modify the arithmetic circuit into an ALU with mode select variable S_2.When $S_2 = 0$, the ALU is identical to the arithmetic circuit, when $S_2 = 1$, it generates the logic functions according to table 2. Draw the logic diagram of two typical stages.	12
	b	Draw the logic diagram of a 4-bit combinational logic shifter.	04

Table 1: Arithmetic operations

S_2	S_1	S_0	$C_{in} = 0$	$C_{in} = 1$
0	0	0	$F = A$	$F = A + 1$
0	0	1	$F = A + B$	$F = A + B + 1$
0	1	0	$F = A - B - 1$	$F = A - B$
0	1	1	$F = A - 1$	$F = A$

Table 2: Logical operations

S_2	S_1	S_0	$C_{in} = 0$
1	0	0	$F = A \vee B$
1	0	1	$F = A \oplus B$
1	1	0	$F = A \wedge B$
1	1	1	$F = A$

12EC35 / 12TE35

USN | | | | | | | | | | |

R. V. COLLEGE OF ENGINEERING

Autonomous Institution affiliated to VTU

III Semester B. E. Examinations Nov/Dec-15

Common to EC / TE

NETWORK ANALYSIS AND CONTROL THEORY

Time: 03 Hours ***Maximum Marks: 100***

Instructions to candidates:

5. Answer all questions from Part A. Part A questions should be answered in first three pages of the answer book only.
6. Answer FIVE full questions from Part B.

PART-A

1	1.1	In the circuit of Fig 1.1, if $i_1 = 14.14 sin(\omega t + 45°)$, $i_2 = 14.14\ sin\ (\omega t - 75°)$ and $i_3 = 14.14\ Sin(\omega t - 195°)$, then find the reading on ammeter $A - 2$. 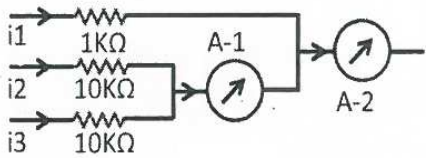 Fig 1.1	02
	1.2	For the arrangement shown in Fig 1.2, calculate the equivalent resistance between the diagonally opposite ends A and B. 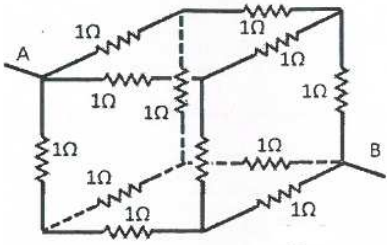 Fig 1.2	02
	1.3	In a system transfer function, the poles and zeros, if complex, must be in _____.	01
	1.4	The load impedance Z_L connected to a generator with impedance $(10 - j10)\Omega$ has both R_L and X_L variables. To minimize the power loss from generator to load, suggest suitable value of Z_L. What is the power delivered to load, if the generator voltage is $10V$?	02
	1.5	For the network in Fig 1.5, the Thevinin's voltage across AB is $V_{AB} =$ _____. 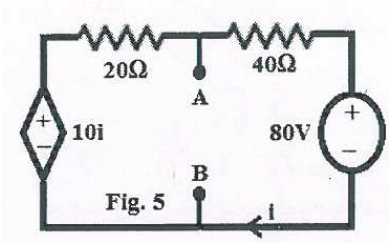 Fig 1.5	01

1.6	In the analysis of networks using Thevinin's and Norton's theorems, while estimating the impedance between the output terminals (Z_{Th}/Z_N), the sources in the network are _____.	01
1.7	In the circuit of Fig 1.7, all initial conditions are zero; switch K is closed at $t = 0$, then find $i(0+)$ and $\frac{d}{dt}i(0+)$, if $V = 10V$ and $L = 1H$. 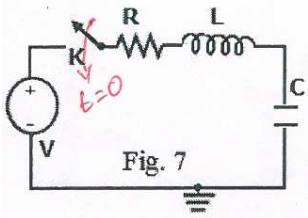 Fig 1.7	02
1.8	A $10\mu F$ capacitor has a charge of $10000nC$ at $t = t_1$. Switching occurs at $t = t_2$, draw the equivalent for the capacitor at $t = \infty$.	01
1.9	Find the initial value and final value for the function $\frac{1}{s(s^2-a^2)}$.	01
1.10	For the block shown in Fig 1.10, the system transfer function $TF = C(s)/R(s)$ is _____. If all the path gains are reduced to unity, then the TF becomes _____. 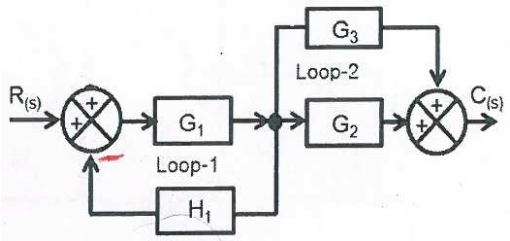 Fig 1.10	02
1.11	Obtain the transfer function for RC integrator circuit.	01
1.12	Find centroid and the point of intersection of root locus on the imaginary axis for a unity feedback system with $G(s) = \frac{K(s+6)}{s(s+1)(s+2)}$.	02
1.13	The expression for steady state error of a first order system to a step input is _____ and to a unit ramp input is _____.	02

PART-B

2	a	Classify networks based on the network components. Give examples.	04
	b	Obtain the circuit for the set of equations given below: $7I_1 - 6I_2 + 12I_3 = 10$, $2I_1 - 12I_2 + 4I_3 = 0$ and $I_1 - I_3 = 5$.	04
	c	Using mesh analysis, find the power absorbed by the dependent voltage source in the circuit of Fig 2 (c). 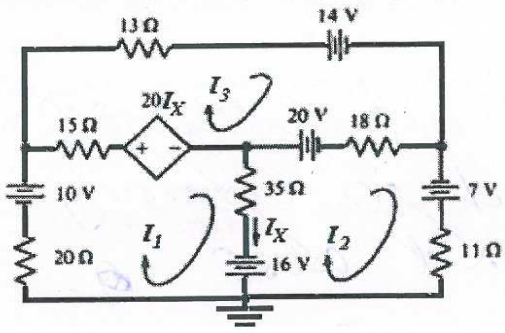 Fig 2(c)	08

		OR	
3	a	Explain the following terms with examples: i) Super mesh ii) Super Node.	04
	b	Obtain the circuit for the set of equations given below: $$\begin{bmatrix} 7+j3 & -j5 & -5 \\ -j5 & 12+j3 & -(2-j2) \\ -5 & -(2-j2) & 17+j2 \end{bmatrix} \begin{bmatrix} I_1 \\ I_2 \\ I_3 \end{bmatrix} = \begin{bmatrix} 10\angle 0^\circ \\ -5\angle 30^\circ \\ -10\angle 90^\circ \end{bmatrix}$$	04
	c	For the network shown in fig 3(c), using Node analysis, find the value of V_B such that current through the capacitive reactance $-j2\Omega$ is only I_2. 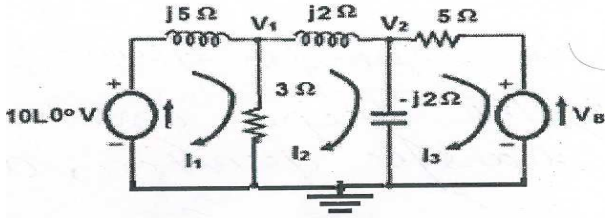 fig 3(c)	08
4	a	With suitable examples, explain the principle of duality in networks.	04
	b	State and explain Thevenin's theorem.	04
	c	For the network shown in Fig 4(c), find the value of maximum power transferred to the 12Ω resistor. 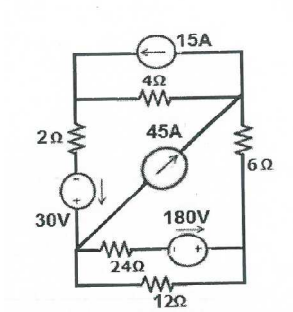 Fig. 4(c)	08
		OR	
5	a	What is meant by dual networks? Explain the use of duality principle.	04
	b	State and explain Superposition theorem.	04
	c	Find the current flowing through and the power dissipated in the 1Ω resistor in fig 5(c) using Millman's theorem. 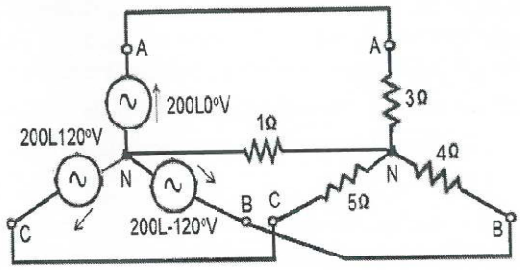 Fig. 5(c)	08

6	a	State and prove initial value and final value theorems.	08
	b	In the circuit shown in fig 6(b), switch is closed at $t = 0$. Obtain the value of $i(t)$ using Laplace transformations; given $R = 9\Omega, L = 2H$ and $V = 4V$ and $C = \frac{1}{7}F$. Assume zero initial conditions. 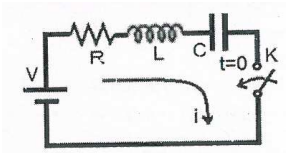 Fig. 6(b)	08
		OR	
7	a	In the circuit of Fig .7(a), switch is moved to position '1' at $t = 0$, there by applying $100V$ source to $R - L$ branch. At time $t = 500\mu s$, the switch is moved to position '2'. Obtain the equations for the current in both positions of the switch and sketch the waveforms of the transients. 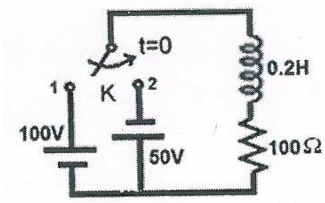 Fig. 7(a)	08
	b	For the circuit shown in Fig .7(b), a step voltage of $V = 100V$ is applied by closing the switch at $t = 0$. Assuming no initial conditions, obtain the value of $v(t)$ across R_1 resistor using Laplace transformations. The circuit component values are $R_1 = 10\Omega, R_2 = 10\Omega, L_1 = 1H$ and $L_2 = 2H$. 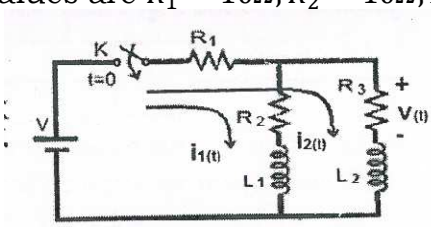 Fig. 7(b)	08
8	a	What are the advantages and disadvantages of open loop control systems?	04
	b	For the system represented by the following set of equations, draw the signal flow graph; here U_1 and U_2 are input variables and X_1 and X_2 and X_3 are output variables. $X_1 = a_{11}X_1 + a_{12}X_2 + a_{13}X_3 + b_1U_1;$ $X_2 = a_{21}X_1 + a_{22}X_2 + a_{23}X_3 + b_2U_3;$ $X_3 = a_{31}X_1 + a_{32}X_2 + a_{33}X_3;$	04
	c	Construct the signal flow graph for the system shown in fig 8(c) and obtain the transfer function using Mason's Gain Formula. 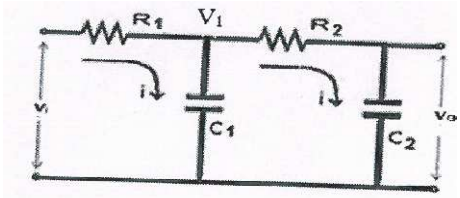 Fig. 8(c)	08

		OR	
9	a	What are the advantages and disadvantages of closed loop control systems?	04
	b	For the network shown in fig 9 (b), obtain the block diagram. 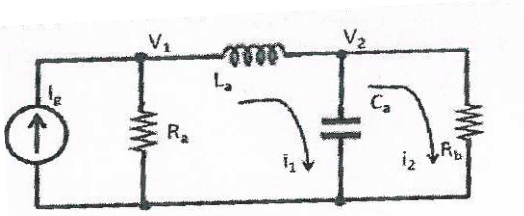 Fig. 9(b)	04
	c	For the block diagram shown in fig 9 (c), obtain the transfer function using block diagram reduction algebra. 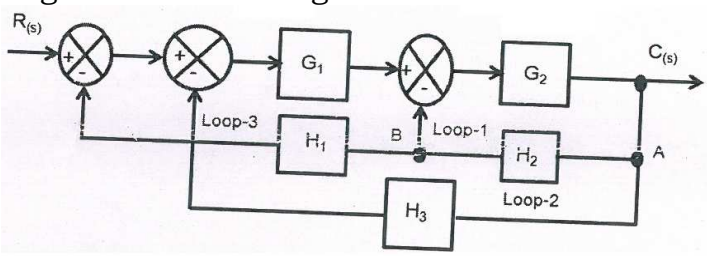 fig 9 (c)	08
10	a	What are the general characteristics of root locus diagrams?	04
	b	What are the steady state error constants? Explain briefly.	04
	c	Find K_p, K_V, K_a for a system with $G(s)H(s) = \frac{(s+10)}{s(s^3+7s^2+12s)}$. Also, evaluate e_{SS} when the input, $f(t) = 2tu(t)$.	08
		OR	
11	a	What are the time domain specifications of a second order system with a step input? Explain briefly.	04
	b	Sketch the RLD for a system whose open loop transfer function is given by $G(s)H(s) = \frac{K}{(s+2)(s^2+4s+3)}$. Also, find the value of K for which the system operates with a damping ratio of $\zeta = 0.5$.	12